3. Oil Pump

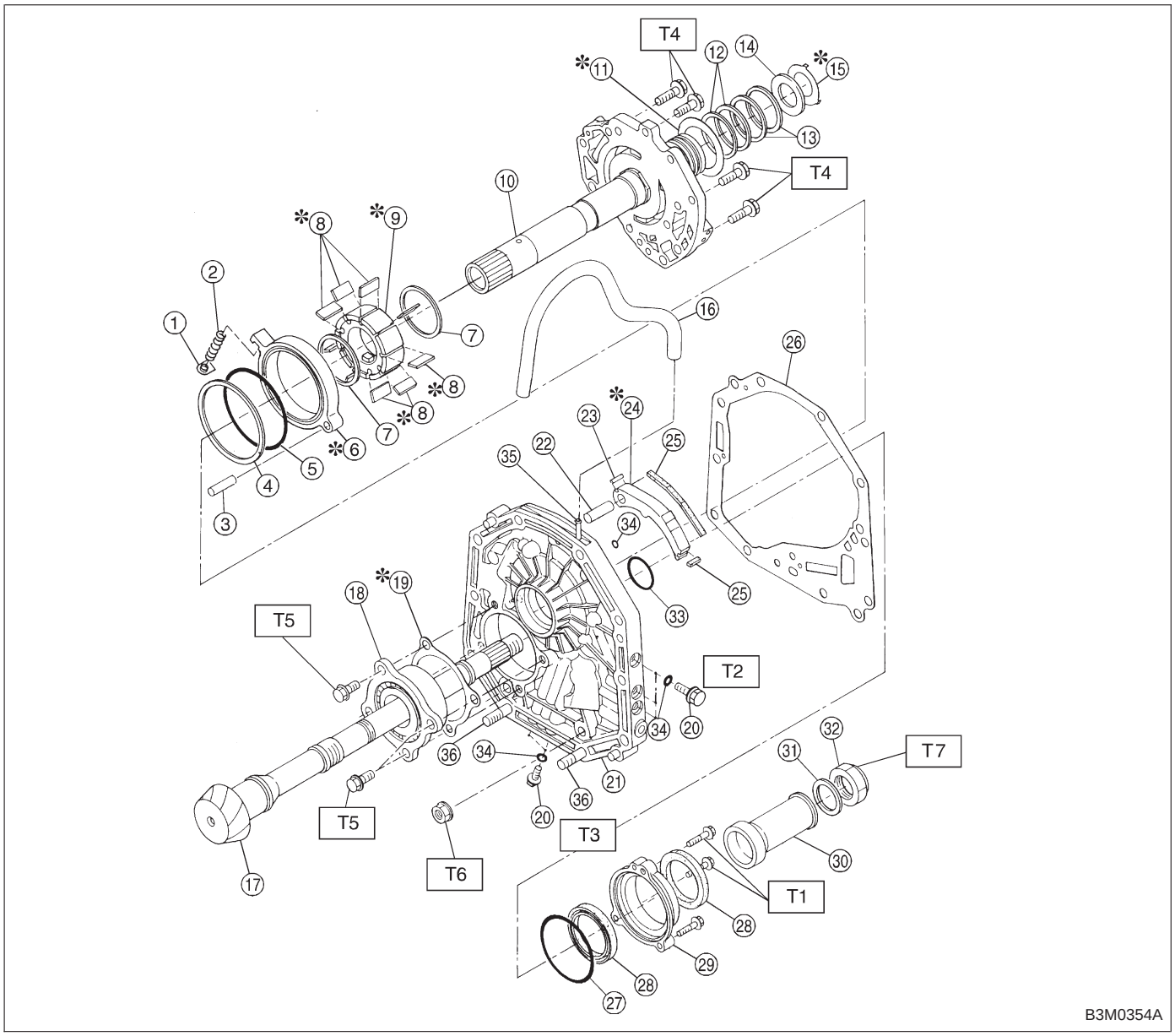

① Retainer
② Return spring
③ Pin
④ Friction ring
⑤ O-ring
⑥ Cam ring
⑦ Vane ring
⑧ Vane
⑨ Rotor
⑩ Oil pump cover
⑪ Thrust washer
⑫ Seal ring (R)
⑬ Seal ring (H)
⑭ Thrust needle bearing
⑮ Thrust washer
⑯ Air breather hose
⑰ Drive pinion shaft
⑱ Roller bearing
⑲ Shim
⑳ Test plug
㉑ Oil pump housing
㉒ Pin
㉓ Side seal
㉔ Control piston
㉕ Plane seal
㉖ Gasket
㉗ O-ring
㉘ Oil seal
㉙ Oil seal retainer
㉚ Drive pinion collar
㉛ Lock washer
㉜ Lock nut
㉝ O-ring
㉞ O-ring
㉟ Nipple
㊱ Stud bolt

Tightening torque: N·m (kg-m, ft-lb)
T1: 7±1 (0.7±0.1, 5.1±0.7)
T2: 13±1 (1.3±0.1, 9.4±0.7)
T3: 18±5 (1.8±0.5, 13.0±3.6)
T4: 25±2 (2.5±0.2, 18.1±1.4)
T5: 39±3 (4.0±0.3, 28.9±2.2)
T6: 41±3 (4.2±0.3, 30.4±2.2)
T7: 113±5 (11.5±0.5, 83.2±3.6)