1. Supplemental Restraint System “Airbag”

Airbag system wiring harness is routed near the transmission control module (TCM).

- **All Airbag system wiring harness and connectors are colored yellow. Do not use electrical test equipment on these circuit.**
- **Be careful not to damage Airbag system wiring harness when performing diagnostics and servicing the TCM.**

2. Pre-inspection

1. ATF LEVEL

Make sure that ATF level is in the specification.

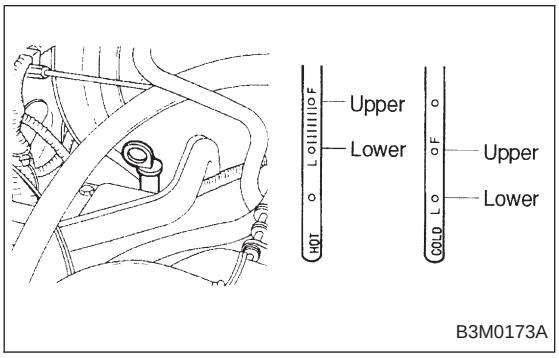

2. FRONT DIFFERENTIAL OIL LEVEL
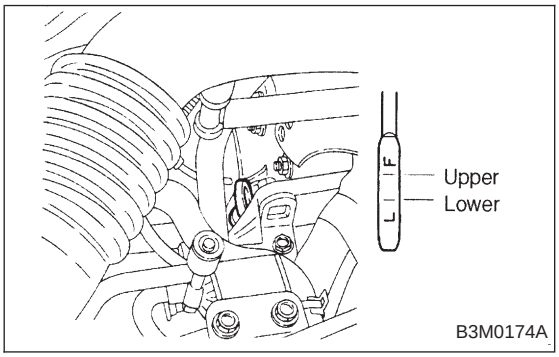
Make sure that front differential oil level is in the specification.